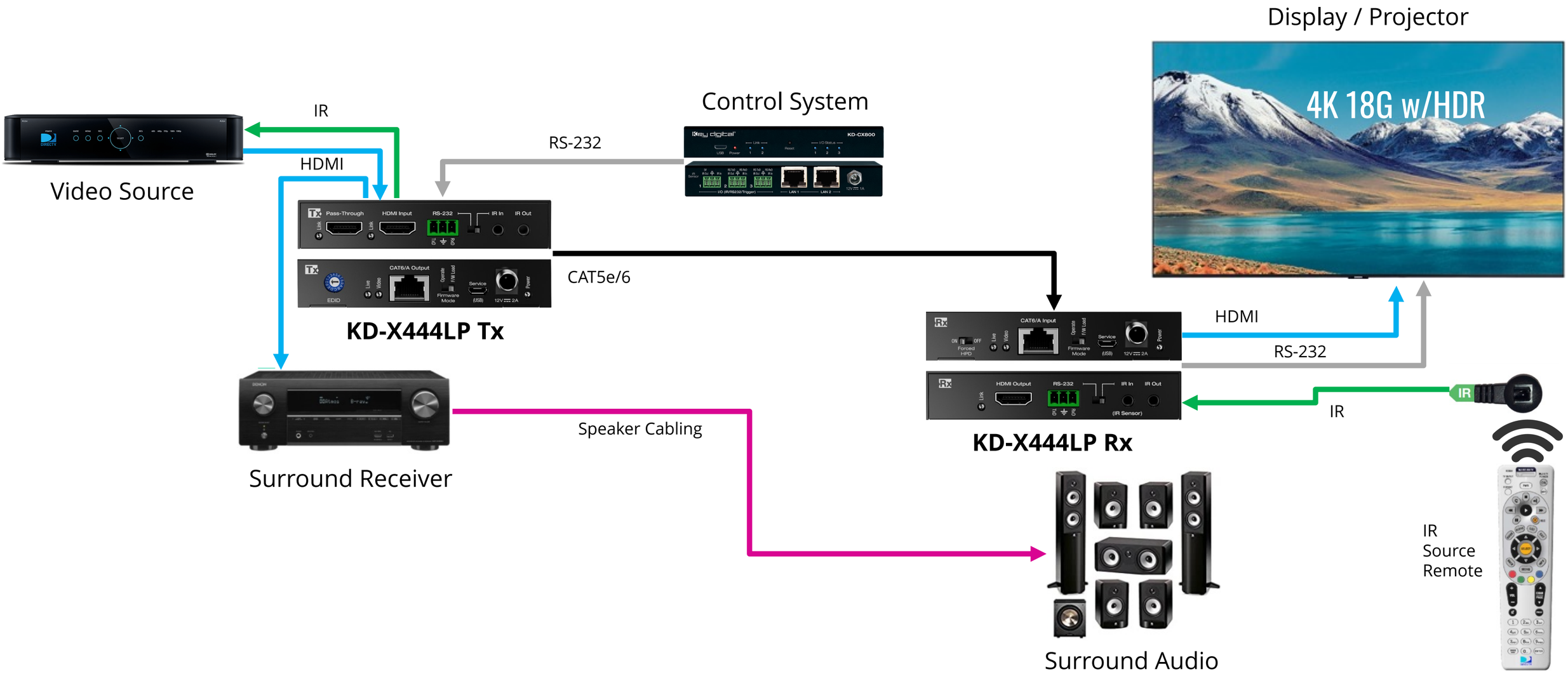
Display / Projector
4K 18G w/HDR
Control System
IR
HDMI
RS-232
Video Source
CAT5e/6
KD-X444LP Tx
HDMI
RS-232
IR
KD-X444LP Rx
Speaker Cabling
Surround Receiver
Surround Audio
IR
Source
Remote