KD-MC1000

Master Controller for Compass Control® (Wired/LAN, supports up to 8 Ports)

System Design Example

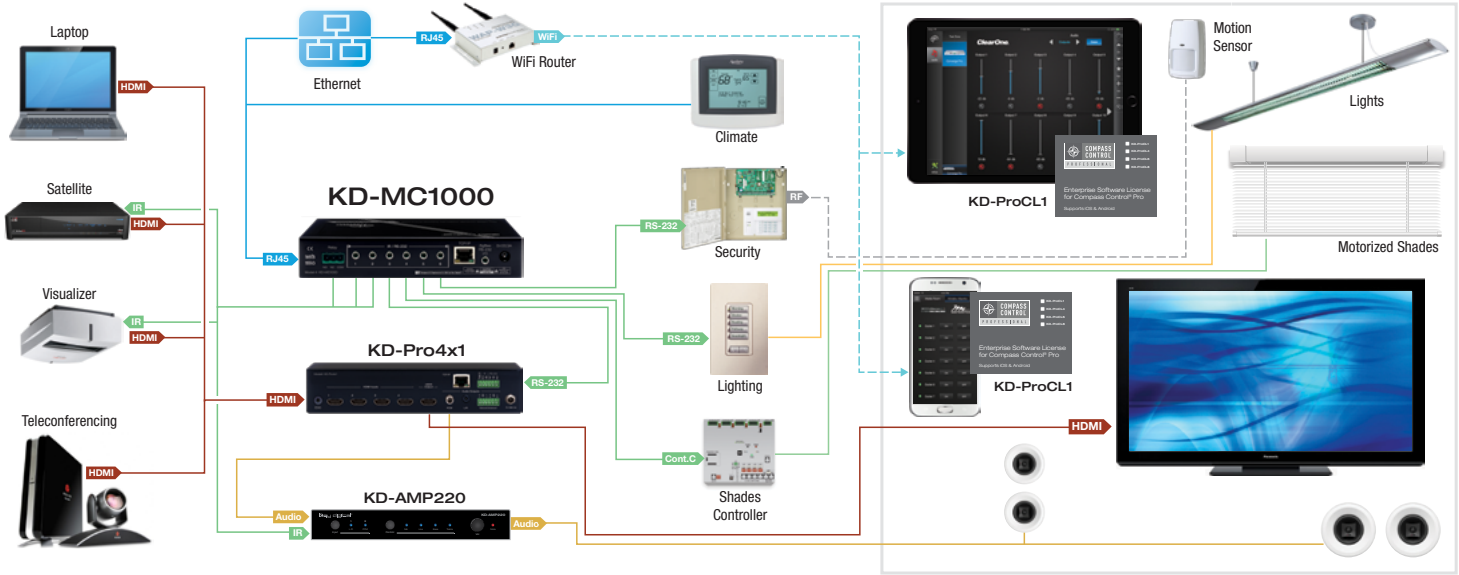

521 East 3rd Street • Mount Vernon, NY 10553 • Phone: 914.667.9700 • www.keydigital.com